EREA TRANSFORMERS

erea · energy · engineering

Technical datasheet

E 124TR40

Brand	**EREA**
Article Number	**E 124TR40**
EAN-code Barcode	5414503001399
Code	2580
Product type	Single-phase safety transformer
Primary Voltage	230V AC
Secundary Voltage	24V AC
Power	40 VA
Standards	EN 61558-2-6|EN 60742

General properties

Applications	Fitting to printed circuits	Maximum ambient temperature ta	40 °C
Protection class	II	Temperature class transfo	E
Degree of protection	IP00	Finishing	Vacuum-encapsulated with synthetic resin

Electrical properties

Frequency	50-60 Hz	Efficiency	85,1 %
Po	3,45 W	Pcu	4,15 W
Dielectric Strenght	4000 Vac	Insulation resistance	200 MΩ

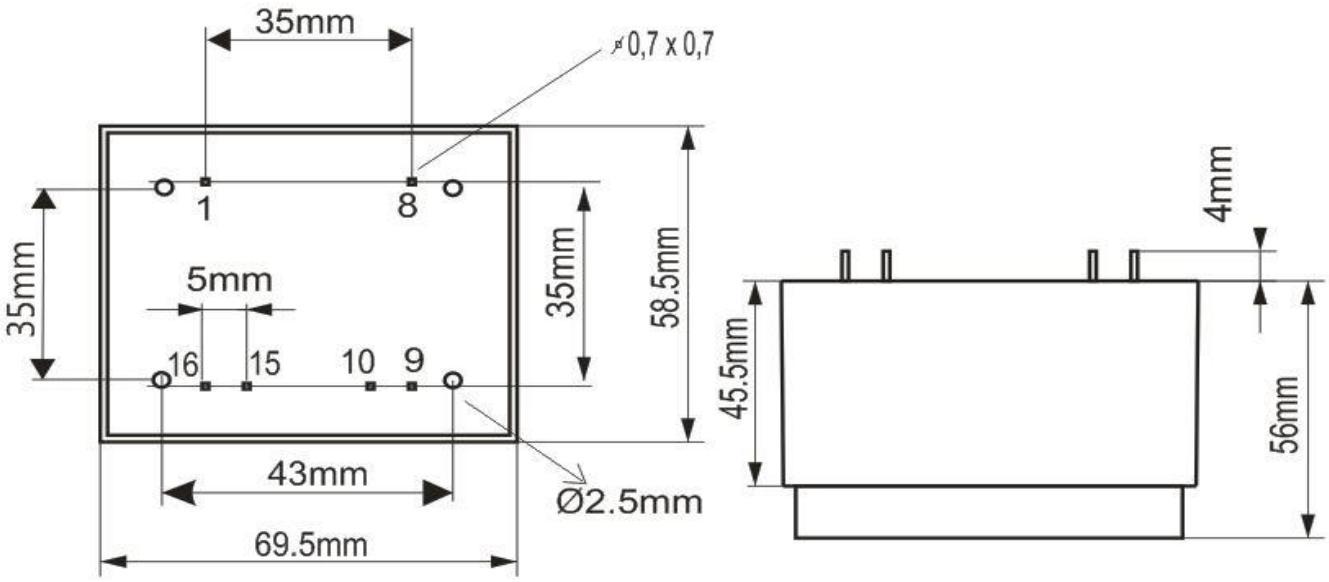

rev. 02.12.2020

EREA Energy Engineering BV
Ruggeveldstraat 1 -- BE 2110 Wijnegem -- Belgium
Tel + 32 3 355 16 00
Fax + 32 355 16 01
sales@erea.be -- www.erea.be

Transforming since 1933

RPR Antwerp -- BTW/TVA/VAT BE 0543.482.783
BELFIUS IBAN BE62 0688 9877 6361 -- BIC GKCCBEBB